RE 6 ∅6 mm, Precious Metal Brushes, 0.3 Watt

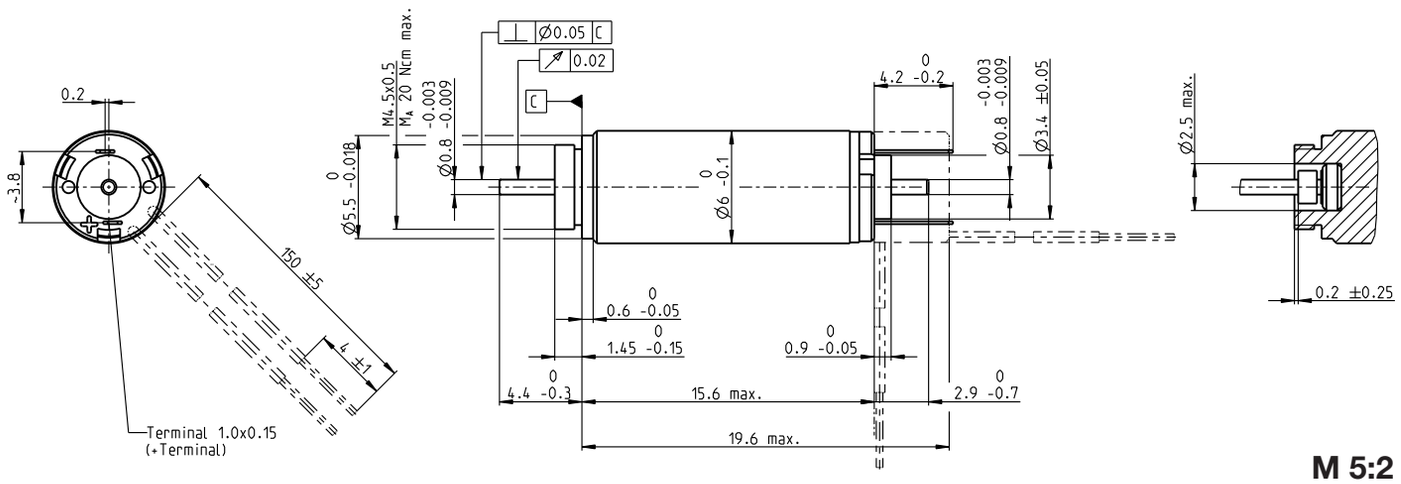

M 5:2

Stock program
Standard program
Special program (on request)

Part Numbers

B with cables	386780	386781	**386782**	386783
A with terminals	349189	349190	**349191**	349192

Motor Data

	Values at nominal voltage					
1	Nominal voltage	V	1.5	3	4.5	6
2	No load speed	rpm	18500	18600	18600	18600
3	No load current	mA	42.6	21.3	14.2	10.7
4	Nominal speed	rpm	4680	5670	5400	5340
5	Nominal torque (max. continuous torque)	mNm	0.302	0.324	0.318	0.316
6	Nominal current (max. continuous current)	A	0.453	0.242	0.158	0.118
7	Stall torque	mNm	0.419	0.485	0.469	0.465
8	Stall current	A	0.581	0.336	0.217	0.161
9	Max. efficiency	%	54	56	56	56
	Characteristics					
10	Terminal resistance	Ω	2.58	8.92	20.8	37.2
11	Terminal inductance	mH	0.023	0.091	0.204	0.363
12	Torque constant	mNm/A	0.72	1.44	2.16	2.88
13	Speed constant	rpm/V	13300	6630	4420	3310
14	Speed / torque gradient	rpm/mNm	47500	41000	42400	42700
15	Mechanical time constant	ms	7.45	7.18	7.24	7.24
16	Rotor inertia	gcm^2	0.015	0.0167	0.0163	0.0162

Specifications

	Thermal data	
17	Thermal resistance housing-ambient	77 K/W
18	Thermal resistance winding-housing	16.2 K/W
19	Thermal time constant winding	1.39 s
20	Thermal time constant motor	16.3 s
21	Ambient temperature	-20…+65°C
22	Max. winding temperature	+85°C
	Mechanical data (sleeve bearings)	
23	Max. speed	23000 rpm
24	Axial play	0.02 - 0.1 mm
25	Radial play	0.012 mm
26	Max. axial load (dynamic)	0.15 N
27	Max. force for press fits (static)	10 N
28	Max. radial load, 4 mm from flange	0.6 N
	Other specifications	
29	Number of pole pairs	1
30	Number of commutator segments	5
31	Weight of motor	2.3 g

Values listed in the table are nominal.
Explanation of the figures on page 151.

Operating Range

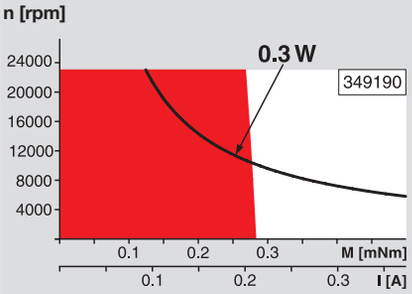

Comments

Continuous operation
In observation of above listed thermal resistance (lines 17 and 18) the maximum permissible winding temperature will be reached during continuous operation at 25°C ambient.
= Thermal limit.

Short term operation
The motor may be briefly overloaded (recurring).

Assigned power rating

maxon Modular System

Overview on page 20–27

Planetary Gearhead
∅6 mm
0.002 - 0.03 Nm
Page 311

Spindle Drive
∅6 mm
Page 361–362

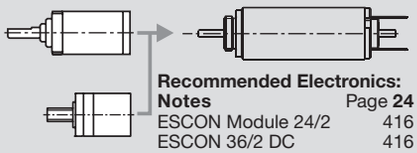

Recommended Electronics:

Notes	Page **24**
ESCON Module 24/2	416
ESCON 36/2 DC	416